LAB 5: JFET CIRCUITS I

UC Berkeley Donald A. Glaser Instrumentation Laboratory

GENERAL GUIDELINES

- **You should complete the prelab questions before beginning benchwork.** Information required to answer the prelab questions can be found in the background material at the beginning of the lab, from lecture, in the stated references, and on the web.

- **Please ask questions of the GSIs or professor(s)** at any time during the course!

- Wikipedia has many useful and informative articles. You are strongly encouraged to use Wikipedia and other online resources to better understand any material.

- **Problems with this icon need to be checked off by GSIs.**

- **Problems with this icon indicate that you should take a picture of the circuit built for the problem and include it in your report. Include your student ID, with name clearly visible, in the photo.**

- **Problems with this icon indicate that you should take a screenshot of the WaveForms oscilloscope.**

- **Important Safety Habits**
  - Before stopping for the day or taking a break, make sure you power down all equipment.
  - When possible, use the switches for the power supplies to power down the circuit when changing the wiring. It is easy to accidentally short wires and damage your equipment or electronic components.
  - Never place food or drink next to any apparatus. Accidental spills can damage or destroy the equipment and your experiment.

1. LEARNING GOALS

(1) Understand how single transistors work

(2) Learn to characterize single transistors

(3) Learn and use current sources and source followers

(4) Learn and understand transistor source amplifier geometries

Do not forward bias the JFET gates. Forward gate currents larger than about 50 mA will burn out the JFETs!

2. LAB BACKGROUND READING

2.1. **JFET Transistors.** There are two principal types of transistors: *bipolar transistors* (BJTs), and *field-effect transistors* (FETs). The physical mechanisms underlying the operation of these two types of transistors are quite different. We will largely limit our study to FETs because their physical mechanism is simpler. FETs are subdivided into two major classes: *junction field-effect transistors* (JFETs) and *metal-oxide-semiconductor field-effect transistors* (MOSFETs).[1]

Static electricity easily destroys MOSFETs; they can be burnt out simply by walking across a room on a dry day while carrying them in your hand. Once soldered into a circuit, however, MOSFETs are quite robust[2]. Although MOSFETs are much more common than JFETs, we will work with JFETs because MOSFETs burn out so easily. JFETs will give us a good picture of how transistor circuits work.

Transistors can be used as *amplifiers*; a small signal is used to control a larger signal. Unlike most of the circuit components we have seen so far, typical transistors have not two but three leads. In the case of a JFET, the voltage on one lead (called the *gate*) is used to control the current between two other leads (called the *source* and the *drain*). Of course, the gate voltage needs to be referenced to some other potential. By convention, it is referenced to the source. In circuit diagrams, JFETs are drawn as shown in Fig. 1, where the gate, drain and source (G, D, S, respectively) labels are normally omitted. Transistor voltages and currents are labeled by subscripts referring to the appropriate lead(s). For example, V_{GS} refers to the voltage between the gate and the source, V_{DS} is the voltage between the drain and the source, I_{D} is the current flowing into the drain, and I_{S} is the current flowing out of the source. Under normal operating conditions, *almost no current flows into the gate*. Consequently, $I_{\mathrm{S}} = I_{\mathrm{D}}$.

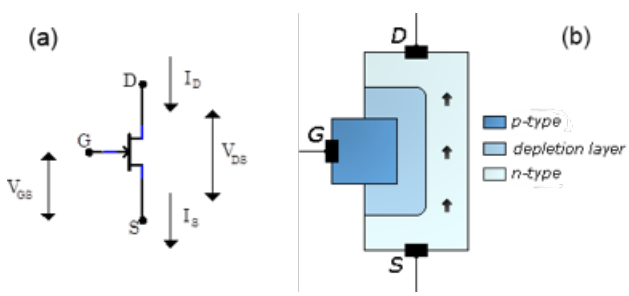

FIGURE 1. (a) JFET symbol and basic definitions. (b) N-channel JFET interior construction.

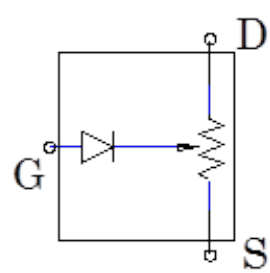

FIGURE 2. A simple JFET diode model.

2.2. **JFET Characteristics and the Transconductance Model.** The JFET gate and drain-source form a p-n junction diode as in Fig. 1b; a very simple model of the JFET is shown in Fig. 2. Checking the internal diode between the gate and the drain or source with a DMM is a good, quick way of determining if a JFET is working; the diode is

[1] To be completely exhaustive, each type of FET is also further subdivided into n and p-channel FETs, and for MOSFETs, enhancement and depletion MOSFETs, but we won't cover this.

[2] A particular kind of fabrication process involving MOSFETs called *complementary MOS* (CMOS) is the backbone of current- and next-generation silicon tracker detectors.

usually blown out in burnt-out JFETs. If the JFET is not burnt out, the DMM (on the diode setting) should show a voltage between 0.65 V and 0.75 V between the gate and both the source and the drain when forward-biased, and overload between the gate and both the source and the drain when reverse-biased. Anything else means the diode is burnt out.

In this simple model, the drain-source resistance depends on the gate bias. Under normal operating conditions, the gate of an n-channel JFET is always negatively-biased relative to the source, i.e. $V_{\mathrm{GS}} < 0$. Consequently, the diode is reverse-biased, and the gate current is negligible, thereby justifying that $I_{\mathrm{S}} = I_{\mathrm{D}}$.[3]

The JFET may burn out if the gate is positively biased.

This simple model is the origin of the names for the leads. For n-channel JFETs, electrons enter the device through the source, exit through the drain, and are controlled by the gate. But by convention we always speak of positive current flow; thus, while electrons enter through the source and go to the drain, positive (or conventional) current flows from the drain to the source.[4] A more useful JFET model replaces the variable resistor in Fig. 2 with a variable current source whose current depends on the gate voltage V_{GS} and the drain-source voltage V_{DS}, as shown in Fig. 3. The drain-source current is largest when the gate-source voltage V_{GS} is zero, typically several milliamps. As V_{GS} is made increasingly negative, the current decreases. When the gate-source voltage V_{GS} reaches a critical negative value, called the gate-source *pinch-off voltage* V_{P}[5], the drain current I_{D} is cutoff entirely and no current flows. The exact value of V_{P} depends on the particular type of JFET, and even varies substantially between JFETs of the same type, but is typically around -0.5 V to -10 V. Thus, as V_{GS} is raised towards 0 V from the pinch-off voltage, a non-zero current I_{DS} starts to flow. A typical plot of the current I_{DS} vs. gate voltage V_{GS} (called a JFET's *characteristic curve*), is shown in Fig. 4a.

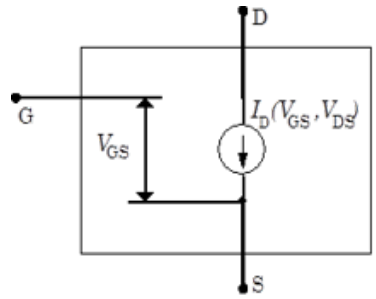

FIGURE 3. Transconductance JFET model.

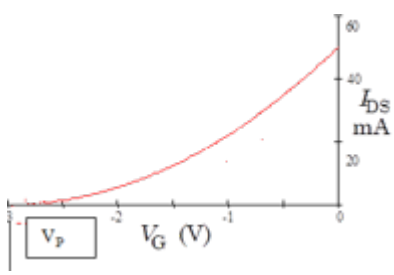

(a) I_{DS} vs. V_{GS} characteristic curve at fixed V_{DS}.

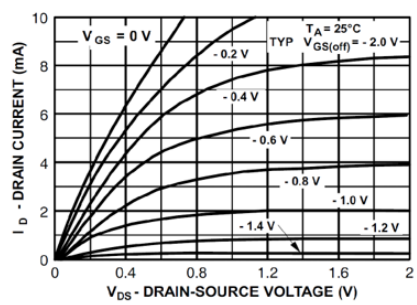

(b) I_{DS} vs. V_{DS} characteristic curve for various fixed V_{GS}.

FIGURE 4. JFET characteristic curves and their dependencies on I_{DS}, V_{GS}, and V_{DS}.

Simple models of JFET performance predict that the curve will be parabolic, particularly near the pinch-off voltage:

$$I_{\mathrm{D}} = I_{\mathrm{DSS}}[1 - (V_{\mathrm{GS}}/V_{\mathrm{P}})]^2 \tag{1}$$

where I_{DSS} is the current at $V_{\mathrm{GS}} = 0$. Actual devices may differ substantially from this prediction. Also note that the pinch-off voltage is independent of the drain-source voltage V_{DS}.

The current I_{D} will also depend on V_{DS} as shown in Fig. 4b. Two regimes are apparent in the figure: a low-voltage *linear regime* where the output current is linearly related to V_{DS}, and a *saturation regime* where the current is almost

[3] For a p-channel JFET, the gate would be positively-biased ($V_{\mathrm{GS}} > 0$). But since the gate and drain-source form a n-p junction, the "diode" switches direction as well so it would still be reverse-biased. P-channel JFETs are relatively rare, and we will only use n-channel JFETs in this course.

[4] For p-channel JFETs, holes flow from the source to the drain, as does positive current.

[5] The pinch-off voltage is sometimes called the *cutoff voltage*.

independent of V_{DS}. JFETs are usually, but not always, used in the saturation region. We will explore the linear regime in Lab 7, but this lab, and the two JFET models we discuss below, concern the saturation regime only.

2.3. **Small-Signal Transconductance Model.** Circuits employing JFETs in the saturation regime typically keep the gate source voltage V_{GS} relatively constant near some average value $\langle V_{\mathrm{GS}}\rangle$. In these circumstances, it is useful to consider a model for the JFET that is linearized around small variations v_{gs} near $\langle V_{\mathrm{GS}}\rangle$, i.e. $v_{\mathrm{gs}} = V_{\mathrm{GS}} - \langle V_{\mathrm{GS}}\rangle$[6]. By convention, the term *large signal* refers to the full, total voltage being applied (V_{GS}), while *small signal* refers to the small deviations (v_{gs}) from the large signal. We use capital letters for large signals quantities (like V_{GS}) and small letters for small signal quantities (like v_{gs}), just as we do with diodes.

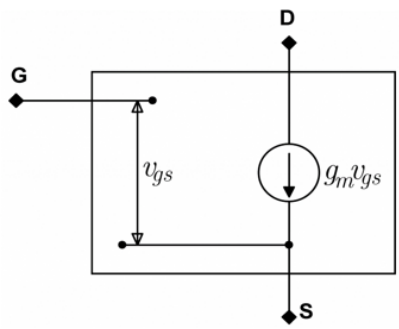

FIGURE 5. Transconductance model diagram.

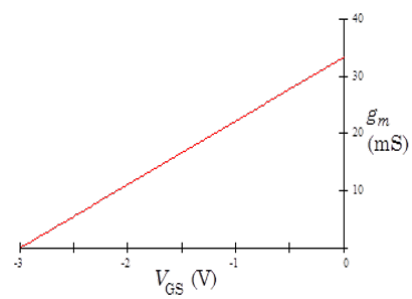

FIGURE 6. Transconductance g_{m} as a function of V_{GS}.

The simplest small-signal model for the JFET is shown in Fig. 5, and relates the linearized drain current $i_{\mathrm{d}} = I_{\mathrm{D}} - \langle I_{\mathrm{D}}\rangle$ to v_{gs} through the linear relation $i_{\mathrm{d}} = g_{\mathrm{m}} v_{\mathrm{gs}}$. The proportionality g_{m} is called the *transconductance*[7].

In any given circumstance, the transconductance is calculated by taking the derivative $g_{\mathrm{m}} = \frac{\partial I_{\mathrm{D}}}{\partial V_{\mathrm{GS}}}$ at fixed V_{DS}. If the JFET transfer characteristic is a pure parabola like that shown in Fig. 4a, then the transconductance will be a straight line like that shown in Fig. 6. The slope of the line will depend on V_{DS}. Thus, the particular value of the transconductance to use in $i_{\mathrm{d}} = g_{\mathrm{m}} v_{\mathrm{gs}}$ depends on both $\langle V_{\mathrm{GS}}\rangle$ and $\langle V_{\mathrm{DS}}\rangle$.

2.4. **Small-Signal Source Resistance Model.** A useful variant of the transconductance model is the source-resistance model. This model consists of an ideal JFET connected to an internal source resistor, r_{s}, as shown in Fig. 7. The value of the source resistor is defined to be $r_{\mathrm{s}} = 1/g_{\mathrm{m}}$, and for a typical JFET is graphed in Fig. 8.

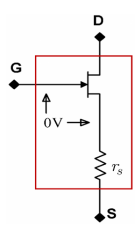

FIGURE 7. Source resistance model.

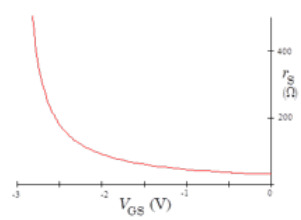

FIGURE 8. Source resistance r_{s} as a function of V_{GS}.

An ideal JFET will have infinite transconductance. Any desired current can be obtained with an infinitesimal v_{gs}; consequently, $v_{\mathrm{gs}} \approx 0$. Note that ideal JFETs cannot be fabricated by themselves; in this model, the ideal JFET and the source resistor r_{s} are an indivisible package that form the "realistic" JFET.[8] The ideal JFET's source is internal to the package and is not accessible to the external circuit. As indicated by the label "S", the "source" lead accessible to the external circuit is the lower end of the source resistor r_{s}. Though the internal ideal JFET has infinite transconductance; the complete device, including the source resistor, will not have infinite transconductance.

[6] This is similar to our analysis of diode behavior for small oscillations around equilibrium that we saw in Lab 4.

[7] The "trans" part refers to the gate voltage being transferred to the source current, and "conductance" refers to the fact that g_{m} has units of inverse resistance, or conductivity.

[8] This is somewhat similar to how we model voltage supplies as a ideal voltage source with some internal Thévenin resistance.

In the source-resistance model, the ideal JFET passes whatever current is necessary to keep the ideal JFET's gate and source at the same potential, hence the "0 V" in the model's drawing.[9]

2.5. **Model Equivalence.** The transconductance model and the source-resistance model are both small-signal, i.e. linearized models. Though it may not be immediately obvious, they are formally equivalent. This equivalence is best established by an example.

- Consider a real JFET whose transconductance is $g_{\mathrm{m}} = 0.01\,\mathrm{S}$ and is driven by a voltage $v_{\mathrm{gs}} = 0.1\,\mathrm{V}$.[10] Clearly, $i_{\mathrm{d}} = v_{\mathrm{gs}}/r_{\mathrm{s}} = 0.1\,\mathrm{V}/100\,\Omega = 1\,\mathrm{mA}$ for the transconductance model.
- How does the ideal JFET in the source resistor model keep its gate and source at the same potential as is required in the source resistance model? It must drive enough current through the source resistor r_{s} to raise the ideal source voltage (the voltage on the bottom lead of the inaccessible ideal JFET imagined to be inside the real JFET) to 0.1 V. Since the source resistance is $r_{\mathrm{s}} = 1/g_{\mathrm{m}} = 1/0.01\,\mathrm{S} = 100\,\Omega$, this requires a current of $i_{\mathrm{d}} = v_{\mathrm{gs}}/r_{\mathrm{s}} = 0.1\,\mathrm{V}/100\,\Omega = 1\,\mathrm{mA}$.

Thus, both models predict the same current i_{d}. Since the models are equivalent, they will give the same results in any circuit. Personally, I find the source-resistance model easier to use.

To reiterate, all constant voltage offsets and constant currents are ignored in small signal models except in the initial calculation of the transconductance. In particular, the V_{GS} bias required to obtain the desired I_{D} is ignored; v_{gs} is centered around zero. Thus, V_{GS} is always negative, but v_{gs} can be positive or negative. The total current flow I_{D} is always positive; i_{d} can be positive or negative.

2.6. **Self-Biased Current Sources.** Current sources are very important in modern circuit design. A typical *operational amplifier* (*opamp* for short), a very common circuit component that we will study extensively in later labs, might contain a dozen current sources. A JFET operated in the saturated regime functions as a current source. As you can see from Fig. 4b, in the saturation regime the drain current I_{D} rises only slowly when the drain-source voltage V_{DS} is increased. However, a JFET operating in isolation is not stiff enough (i.e. I_{D} is not sufficiently independent of V_{DS}) for most applications. Moreover, I_{D} will vary substantially with temperature.

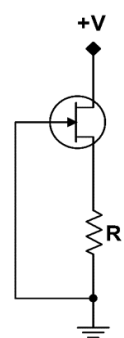

FIGURE 9. Self-biased current source.

The self-biased current source shown in Fig. 9 is a much stiffer source (i.e. I_{D} doesn't change significantly as V_{DS} changes). As in any current source, the current through the source I_{D} is almost independent of the voltage $+V$ across the circuit. In an ideal, infinitely stiff source, the current would be entirely independent of V. The magnitude of the current can then be changed at will by changing the value of the resistor R.

It is probably not immediately obvious how we could deduce this behavior from the circuit diagram. This circuit depends on *feedback*: the output of the circuit controls its input. Feedback is an extraordinarily useful and general circuit design technique that has almost magical power. This self-biased current source is the first of many feedback circuits that we will study in this course.

Let's think about how the above current source might start up when power is first applied. Imagine that the +V source is turned on abruptly, and no current is yet flowing through the JFET. Then the voltage drop across the resistor will be zero, and the gate source voltage V_{GS} will also be zero. But $V_{\mathrm{GS}} = 0$ allows large currents to flow through the JFET, so the current will increase. As the current increases, a voltage drop will develop across the resistor, and the upper end of the resistor will become positively biased relative to ground. Since the gate is fixed at ground, this means that the gate will become negatively-biased with regards to the source. As V_{GS} becomes more negative, the current begins to shut off. Eventually, a stable equilibrium will be attained where V_{GS} is just right for the desired current to flow through the JFET.

[9] You can picture it as if there is a Maxwell's Demon that is constantly measuring the ideal JFET's gate source voltage and adjusting the current through the JFET to keep this voltage at zero. Don't worry that this is a rather cartoonish picture; it is really quite useful.

[10] The unit S is the unit of conductance, the *siemens*, which is equal to Ω^{-1}. You will sometimes see the archaic, but much more amusing unit, the *mho* (which is "ohm" backwards) for conductance.

Now the circuit is in equilibrium. What if we were to increase the current? Then the voltage drop across the resistor would increase, the JFET source voltage would become more positive relative to ground, V_{GS} would become more negative, and the JFET would shut off slightly. If the current were to instead decrease, the drop across the resistor would decrease, the JFET source would become less positive, V_{GS} would become less negative, and the JFET would turn on slightly more.[11]

In sum, the circuit regulates its output by feeding back a signal proportional to its output (in this case, the voltage across the resistor) into its input. In turn, this feedback to the input regulates the output.

The equilibrium current through the JFET, i.e. the drain-source current, can be predicted by load line analysis. Fig. 10 plots the gate transfer characteristic in Fig. 4a in red. It also plots the load line $I_{\mathrm{D}} = -V_{\mathrm{GS}}/R$. Why does the load line graph have a negative slope? Think about the circuit carefully; for positive current running through R, the voltage across R is the inverse of V_{GS}, hence the negative sign.

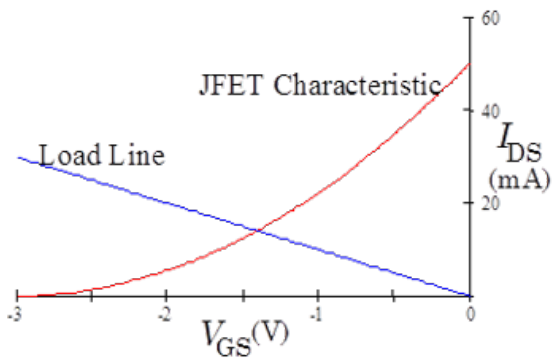

FIGURE 10. Self-biased current source load line analysis.

In analogy with the diode load line analysis, the JFET characteristic and the load line must be satisfied simultaneously. This will only occur at the intersection of the two curves; this intersection then gives the equilibrium current.

Why is this current source stiff? Consider variations in the applied voltage $+V$ and the corresponding variations in V_{DS}. These V_{DS} variations will cause changes to the JFET characteristic curve, simplistically varying the coefficient of the parabolic dependence I_{DSS}, and shifting the curve up and down. These variations will be small, however, if the JFET is in its saturated regime, where I_{D} is relatively independent of V_{DS}. Then consider how the equilibrium point changes. If the load line has a small slope, the changes in the characteristic curve will primarily move the intersection point horizontally. The current I_{D} will barely change. Consequently, the source will be stiff.

Let's see this from our equations. The stiffness can be calculated within the model in Eq. 1. Taking differentials of this equation yields:

$$\Delta I_{\mathrm{D}} = \left[1 - (V_{\mathrm{GS0}}/V_{\mathrm{P}})\right]^2 \Delta I_{\mathrm{DSS}} - 2I_{\mathrm{DSS0}}[1 - (V_{\mathrm{GS0}}/V_{\mathrm{P}})]\Delta V_{\mathrm{GS}}/V_{\mathrm{P}} \tag{2}$$

where ΔI_{DSS} is the change in I_{DSS} from I_{DSS0} due to some change in V_{DS}. Normalizing by Eq. 1 gives:

$$\frac{\Delta I_{\mathrm{D}}}{I_{\mathrm{D0}}} = \frac{\Delta I_{\mathrm{DSS}}}{I_{\mathrm{DSS0}}} - \frac{2\Delta V_{\mathrm{GS}}}{V_{\mathrm{P}}(1 - \frac{V_{\mathrm{GS0}}}{V_{\mathrm{P}}})} \tag{3}$$

where I_{D0} and V_{GS0} are the equilibrium current and gate source voltage. From the load line, we know that $\Delta I_{\mathrm{D}} = -\Delta V_{\mathrm{GS}}/R$, where R is the current source resistor. Normalizing, equating this to Eq. 3, and manipulating gives

$$\Delta I_{\mathrm{D}} = \frac{I_{\mathrm{D0}}/I_{\mathrm{DSS0}}}{1 + 2\dfrac{RI_{\mathrm{D0}}}{|V_{\mathrm{P}} - V_{\mathrm{GS0}}|}} \Delta I_{\mathrm{DSS}} \tag{4}$$

An external-bias current source built from a JFET in the saturated regime, with V_{GS} held at some fixed value by an external bias, and without a resistor at the source, would vary by $\Delta I_{\mathrm{D}} = (I_{\mathrm{D0}}/I_{\mathrm{DSS0}})\Delta I_{\mathrm{DSS}}$. Thus, the self-biased current source is stiffer than this external-bias current source by the factor in the denominator of Eq. 4. As this factor is typically 5 to 10, and can be much greater with the right choice of parameters, the self-biased source is appreciably stiffer.

[11] In the language of potentials that you've seen in mechanics, we might say that the current sits in a stable equilibrium, and thus perturbations from the equilibrium are pushed back towards, rather than away from, the equilibrium point.

2.7. **Source Followers.** A follower is a circuit whose output voltage equals its input voltage. Since followers have no voltage gain, it might appear that they are useless—why not just use a wire? However, followers can have large current gains, which may be more important than voltage gain for high input impedance sources[12]. For example, a common type of microphone has an output impedance near 1 MΩ, and puts out a signal of 10 mV, leading to an output current of only 10 nA. Such a tiny output current makes the signal difficult to use. If the signal were fed into a voltage follower with an output impedance of 100 Ω, the current would increase to the much-easier-to-work-with value of 100 µA, a current gain of 10^4.

A particular type of follower, a *source follower*, can be constructed by slightly modifying a self-biased current source. Instead of grounding the gate as is done in the current source, the gate is driven by the input signal V_{in} as in Fig. 11. The output V_{out} is taken off the source resistor R_{S}. The notation is confusing here; this source resistor R is a physical resistor attached to the JFET source. It is different from r_{s}, the imaginary internal source resistor used in the small-signal source resistance model.

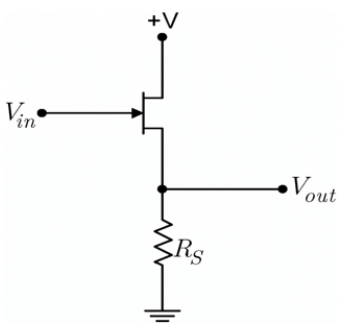

FIGURE 11. Source follower circuit diagram.

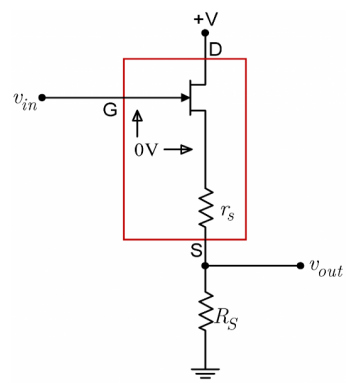

FIGURE 12. Source follower in the small-signal model.

The circuit's behavior changes little from that of the current source. Assume that, with $V_{\text{in}} = 0$, the current through the JFET is I_{D0}. Then the gate-source voltage would be $V_{\text{GS0}} = -R_{\text{S}} I_{\text{D0}}$. If V_{in} were to become positive, and I_{D} did not change from I_{D0}, the gate-source voltage V_{GS} would increase (i.e. become less negative), perhaps substantially. This would cause the JFET to increase I_{D}, which, in turn, would increase the voltage drop across R_{S}, thereby decreasing V_{GS}. We will see shortly that in equilibrium, the current I_{D} would increase just enough that the gate-source voltage would barely increase from its value of V_{GS0}. Similarly, if V_{in} were to become negative, the equilibrium current would decrease just enough that the value of the gate source voltage would barely decrease from its value of V_{GS0}. Since V_{GS} barely changes, the output voltage V_{out} must track V_{in}, and the circuit acts like a follower. Note that "track" does not mean "equal"; while the large-signal voltage V_{out} does not equal V_{in}, the small-signal voltage v_{out} does equal v_{in}.

Remember that V_{GS} always remains negative; the JFET gate is always reverse biased.

The follower's small-signal behavior can be described more accurately by replacing the JFET by its source-resistance model, as shown in Fig. 12. Remember that in this model, the ideal JFET keeps the internal source at the same potential as the gate. The model reduces to a voltage divider driven by a voltage-controlled voltage source as shown in Fig. 13. Thus, the output of the circuit is:

$$v_{\text{out}} = \frac{R_{\text{S}}}{R_{\text{S}} + r_{\text{s}}} v_{\text{in}} \tag{5}$$

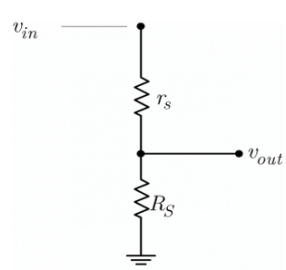

FIGURE 13. Reduced source follower small-signal model.

So long as r_{s} is much less than R_{S}, the output voltage will closely follow the input voltage.

[12] In fact we'll find that one can trivially turn a circuit with current gain into one with voltage gain by putting the gained current across a resistor!

Using the model in Fig. 12, we can easily calculate the output impedance of the follower. If we ground v_{in} and look backwards into the circuit from v_{out}, we see the two resistors in parallel.[13] Thus, the output impedance is:

$$z_{\text{out}} = \frac{r_{\text{s}} R_{\text{S}}}{r_{\text{s}} + R_{\text{S}}} \tag{6}$$

So long as r_{s} is small relative to R_{S}, the output impedance will be approximately r_{s}, and since r_{s} itself is generally small, the follower's output impedance will be small.[14]

2.8. **Common Source Amplifier.** Adding a drain resistor R_{D} to a source follower turns it into a voltage amplifier, as shown in Fig. 14. This topology amplifier is known as a *common source amplifier*. The equivalent small-signal circuit for the amplifier is shown in Fig. 15 and is most easily understood by remembering that the current in a source follower is given by

$$i_{\text{s}} = \frac{v_{\text{in}}}{R_{\text{S}} + r_{\text{s}}} \tag{7}$$

Since this current is largely unchanged by the addition of the drain resistor, the output voltage will be

$$v_{\text{out}} = -R_{\text{D}} i_{\text{s}} = -\frac{R_{\text{D}}}{R_{\text{S}} + r_{\text{s}}} v_{\text{in}} \tag{8}$$

Thus, the gain of the amplifier is

$$G = -\frac{R_{\text{D}}}{R_{\text{S}} + r_{\text{s}}} \approx -\frac{R_{\text{D}}}{R_{\text{S}}} \tag{9}$$

where the last equality assumes that the transconductance is high and consequently r_{s} is low. The approximation is an upper bound and is useful for general scaling. However, it is generally not very accurate.

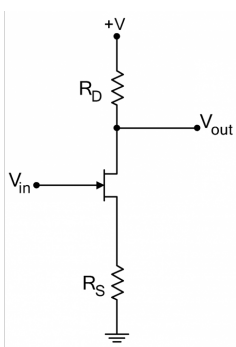

FIGURE 14. Common source amplifier.

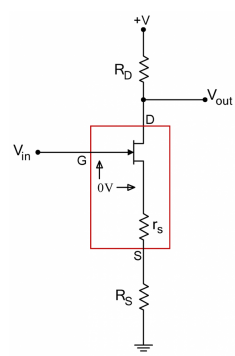

FIGURE 15. Common source amplifier small-signal model.

As with the source follower, the input current is given by the gate leakage current, so the amplifier's input impedance is extremely high. As you'll show in P5.8, the output impedance of the amplifier equals the drain resistance R_{D}, and, unlike the output impedance in the follower circuit, it is not low.

2.9. **Multistage Amplifiers.** The gain of a single stage amplifier is often insufficient. Consequently, it is common to cascade amplifiers—to pass the output from the first stage to the input of the second—to form a multistage amplifier. Two possible configurations are shown in Fig. 16. The left amplifier is called a *directly-coupled (DC) amplifier* and would pass all frequencies. The right amplifier, called an *AC coupled amplifier*, is coupled through the capacitor, which, with the 1 MΩ resistor, forms a high pass filter with a 3 dB point of 0.16 Hz. Consequently, it will not amplify a DC or very low frequency signal. Since the capacitor stops DC, it is often called a *blocking capacitor*.

[13] Alternatively, remember that this is just a voltage divider, and you've found the output impedance of a voltage divider in Lab 1!
[14] For further information about self-biased followers, see Sedra & Smith, 2nd ed., pg. 282-287.

Why would anyone ever not want to build a DC amplifier? There are several reasons, but the most basic is that the DC design in Fig. 16 would not work well, or even at all. The problem is that the bottom of the first JFET's drain resistor would be at approximately +6 V. This would likely forward bias the second JFET gate, and the JFET would no longer be in a working operating regime. There are other circuits, using other devices, that can be DC coupled.

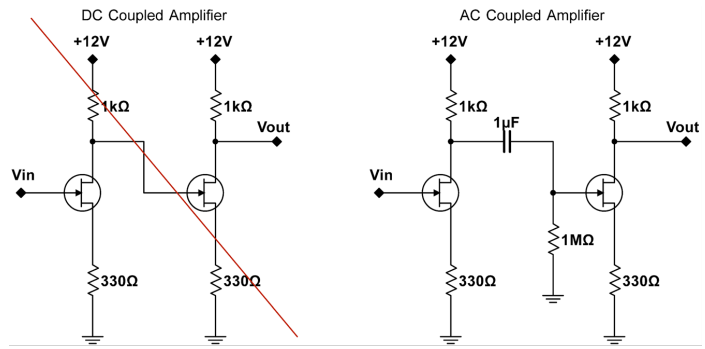

FIGURE 16. DC and AC coupled multistage amplifiers.

If desired, we can take advantage of the AC topology to level-shift the signal. For instance, if the bottom of the 1 MΩ and second JFET source resistor were connected to −12 V rather than ground, we could power the second stage between −12 V and +12 V. This would place a larger voltage across the JFET, and, among other things, allow for a large output voltage swing.

2.10. **Packaging and Leads.** Transistors are manufactured in many different packages and sizes. The JFETs that we will use in this lab, the J113, come in a common plastic package as shown in Fig. 17. Conveniently, the leads come pre-splayed out, matching the spacing of our breadboards. **Try not to bend them further**.

Many JFETs, including the J113, are *symmetrically constructed*: the source and drain can be interchanged without changing the device's behavior. Note that this does not mean physically symmetric—**the gate is not the middle lead!** Thus, for simplicity and consistency, always use the correct source and drain leads.

Asymmetric JFETs, in which the source and drain cannot be interchanged, are normally drawn with an offset gate lead as shown in Fig. 18.

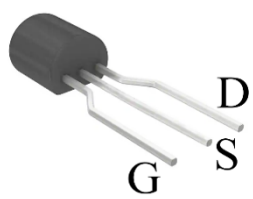

FIGURE 17. J113 package, shown from the back (curved, non-flat) side of the JFET. **When looking at the flat side of the JFET, the GATE is the RIGHT-MOST lead.**

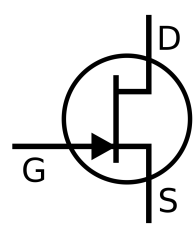

FIGURE 18. Asymmetric JFET circuit symbol.

3. PRE-LAB QUESTIONS

P5.1) What is the maximum allowed gate current? What happens if this current is exceeded?

P5.2) What is the maximum allowed gate-source voltage, V_{GS}?

P5.3) In a few sentences, explain how a self-biased current source works.

P5.4) Explain how to use load line analysis as outlined in the background reading to find the equilibrium current for the self-biased current source.

P5.5) At what allowable V_{GS} and V_{DS} does the minimum dynamic transimpedance r_{s} occur? Or equivalently, where does the maximum transconductance occur?

P5.6) Why does increasing a follower's source resistor R_{S} decrease its JFET's transconductance g_{m}?[15] Why does this degrade the performance of a source follower?

P5.7) Discuss some of the factors that limit the gain of a common source amplifier. Why can't the gain be made arbitrarily high simply by increasing the ratio of the drain resistor to the source resistor?

P5.8) What is the output impedance of a source amplifier? Please use the assumption that the transistor is in the ideal saturation limit, i.e. its current doesn't depend on V_{DS}.

P5.9) The most common lab mistake when working with JFETs is to mix up which lead is which / mix up which leads go to which parts of the circuit. Explain how to identify the leads of the J113 JFET. (Remember this if your circuits don't seem to work as you expect: first, check whether the JFET is plugged in correctly! Is it backwards? Did you remember that the gate is not the center lead?)

[15] If you need a hint, feel free to read the discussion in L5.8.

4. LAB EXERCISES

Problem L5.1 - Basic JFET Checks. **Test** that your JFET is working by doing DMM diode tests between the various pins. Remember to use the diode setting on your DMM. **Describe** the results of all your measurements.

Problem L5.2 - JFET Switch. JFETs can be used as electronic switches. **Build** the circuit in Fig. 19 which switches an LED on and off.

When powered on, but with the gate disconnected from any other part of the circuit, the LED will likely turn on.

Attach a wire to the gate and then **touch** the other end of this wire to −12 V to turn the LED off. Then **touch** the wire to ground to turn the LED on. So far, this switch is not very impressive; we could just as well have switched the LED on and off by moving its own lead rather than the JFET gate lead.

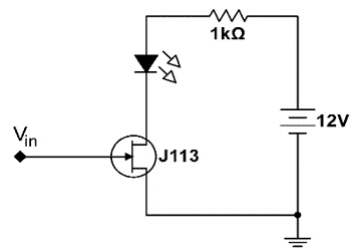

FIGURE 19. JFET switch circuit.

Place a 5.6 MΩ resistor in series with the gate lead. Can you still switch the LED on and off by touching the gate to ground and −12 V through the resistor? From Lab 4, you know that the LED will not light when driven by a 5.6 MΩ resistor. The JFET allows us to control the substantial LED current with the very small current available through the 5.6 MΩ resistor, thus demonstrating current amplification.

Problem L5.3 - JFET Memory. You probably observed that when you disconnected the JFET gate from −12 V, the LED will turn back on even without your touching the gate to ground, i.e. even if you leave the gate floating. You may have also observed that there is a slight delay; the LED may take some time to turn on. Let's play with this effect. Touch the gate to −12 V for an instant and the LED stays off briefly even after you remove the connection to −12 V; touch the gate to ground and the LED turns on instantly and will stay on. This turn-on delay will vary from circuit to circuit and can range from a barely noticeable 100 ms to a very noticeable several seconds. In all cases, the delay indicates that the circuit has *memory*.

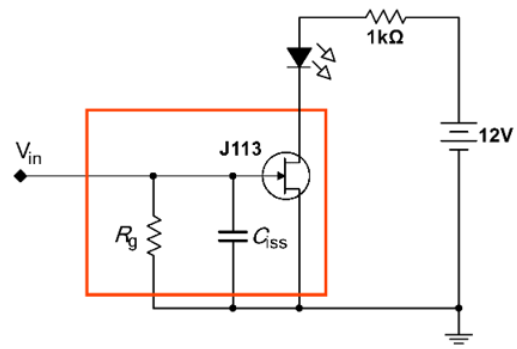

FIGURE 20. JFET switch model with internal capacitance and resistance.

The circuit's memory results from the JFET's intrinsic gate capacitance C_{iss} and very high gate resistance R_{G}. The capacitance comes from the finite physical dimensions of the JFET. This internal capacitance is not directly accessible from the outside of the device and will vary from device to device. Likewise, the gate resistance R_{G} is the resistance of the reverse biased gate diode, and is also not accessible from the outside and will vary from device to device. A model of the JFET that includes these effects is shown inside the orange box in Fig. 20.

The circuit memory time can be extended by adding an external capacitor. **Measure** the turn-on time with an external capacitor C_{ext} placed between the gate and ground (i.e. in parallel with the modeled gate resistor R_g and gate capacitance C_{iss}, *not* in series from V_{in} to the gate). Use a cell phone stopwatch for timing. Aim for a memory turn-on time of about one minute, using the calculation from 5.3a below to determine C_{ext} (your capacitor will probably be between 10 pF and 47 nF). Do not use the 5.6 MΩ resistor that you used in L5.2. Touch ground and −12 V directly to the JFET gate. And when you remove the −12 V from the gate, ensure your hands are not in contact with a wire connected to the gate.[16] This is best accomplished by plugging one end of a wire into −12 V and touching the gate with the free end of the wire, rather than keeping one end of the wire plugged into the gate and moving the other.

(a) Assuming that the circuit turn-on time is dominated by the external capacitor C_{ext} and R_{G}, and that it takes a time $t = R_{\text{G}}C_{\text{ext}}$ for the circuit to turn on. **Find** R_{G}. You should find that R_{G} is very large — in the gigaohm range or even higher!

[16] If you were to plug a wire into the gate, and then touch the free end to −12 V, you would still be holding the gate wire after you have removed −12 V from the gate. Doing so would add your substantial body capacitance to the circuit.

(b) Then **remove** the external capacitor C_{ext} and **measure** the turn-on time again. **Calculate** C_{iss}.[17] You should find that C_{iss} is no more than a few tens of picofarads.[18]

This memory effect is the basis for the dynamic *random access memory* (RAM) found in computers. Computers use two types of memory. *Static RAM* (SRAM) remembers information forever but is relatively expensive and cannot be packed tightly on a chip. *Dynamic RAM* (DRAM) is cheaper and smaller, and functions very much like the memory cell here. Virtually all the fast memory in a computer, often 4 to 64 GB in 2020, is DRAM.

The gate capacitance is very small for the FETs used in DRAM, so the memory time is short. The computer must remind, or refresh, the memory of its state every few milliseconds; first it has to read each memory bit to find out what state it is in, and then refresh the memory bit by the equivalent of touching the bit's gate to the appropriate potential. The computer must cycle through all its memory this way every few milliseconds. All these operations are hidden from the user.

Problem L5.4 - JFET Gate Transfer Characteristic Curve at Fixed Drain-Source Voltage. For this question, we will be determining the characteristic curve of a JFET at a fixed V_{DS}, at around +12 V. **Build** the circuit shown in Fig. 22. Use your DMM for the current meter, adjusting the DMM range as you take measurements.

For the variable voltage source use the Wavegen. Set it to DC, and use the Basic setting to output an adjustable DC voltage with the Offset, as shown in Fig. 21. **Make sure that you never positively bias the gate; the offset should always be zero or negative.** You can reduce, but not eliminate, the ways that you can positively bias the gate by **setting** the Max input in the function generator to 0 V. If you do not see this option, make sure you have the Wavegen set to Basic.

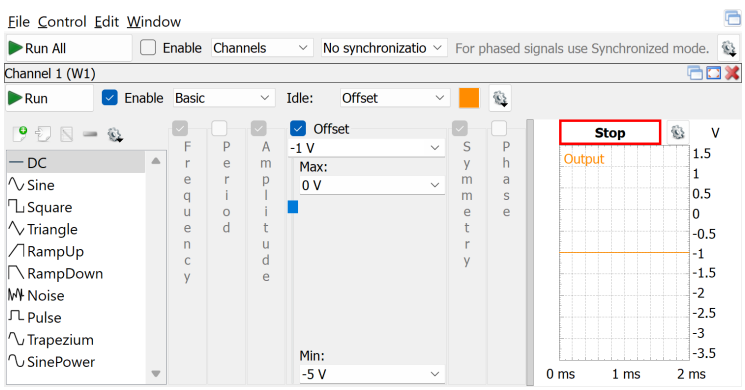

FIGURE 21. Wavegen configuration for gate transfer characteristic measurement.

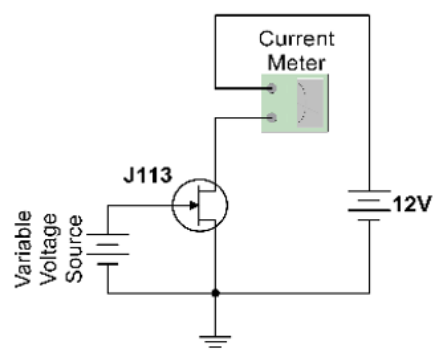

FIGURE 22. Gate transfer characteristic circuit.

(a) **Measure** the drain current I_{D} as a function of the gate voltage V_{GS}. Your measurements should generally be spaced by $\Delta V_{\text{GS}} = 0.1\,\text{V}$. Near the cutoff voltage, your points should be more closely spaced.

(b) **Graph your data**; it should look something like the data in Fig. 23. **Fit** your data to the parabolic curve given by Eq. 1. The fit parameters are I_{DSS} and V_{P}. A fit is also shown in Fig. 23.[19]

(c) Take the **derivative** of the parabolic fit that you found for the gate transfer characteristic to **plot** the transconductance g_{m}.[20] You should obtain a graph that resembles Fig. 6. Remember to **convert** from milliamps to amps to get the proper units for the transconductance: inverse ohms.

(d) Then **invert** the transconductance to **plot** the internal source resistance r_{s}, as in Fig. 8.[21]

[17] The turn-on time may be too short to measure; if so, set an upper bound on C_{iss}.

[18] In reality, your value of R_{G} may be lower than the actual value as it can be dominated by leakage resistance in the breadboard, and your value of C_{iss} may be higher than the actual value as it can be dominated by external capacitance in the leads and breadboard.

[19] You can use an automated fitting routine, but it is acceptable to find the fitting parameters by hand.

[20] Use the fit, not the original data, to take the derivative. The data will be too noisy.

[21] Note that there is a small problem with the method used to collect this characteristic curve. The curve is supposed to be collected at

Mark this JFET with some tape; you will need this data and the associated JFET for future problems.

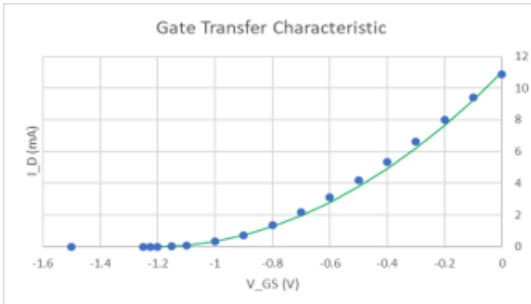

FIGURE 23. Data for the gate transfer characteristic curve. Where is the pinch-off voltage V_p (below which no drain current I_D flows) as a function of V_{GS}?

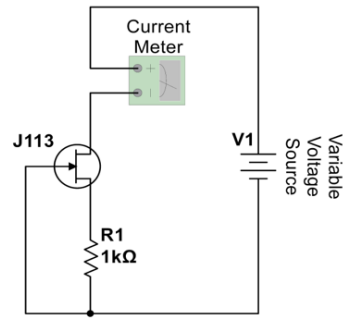

FIGURE 24. Self-biased current source.

Problem L5.5 - Self-Biased Current Source. Build the self-biased current source shown in Fig. 24 using your JFET from L5.4. Note that, since we have the resistor, one can measure current with the oscilloscope across R_1 instead of the DMM.

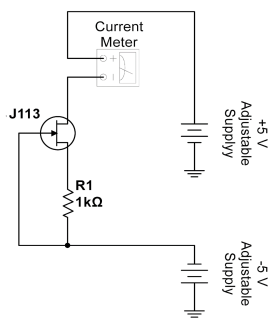

FIGURE 25. +6 V to +10 V circuit.

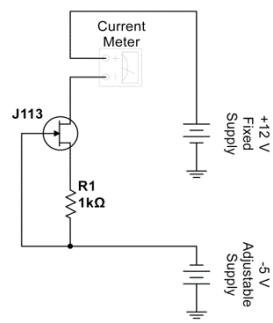

FIGURE 26. +13 V to +17 V circuit.

Range (V)	Wavegen	"$V+$" supply	"$V-$" supply	+12 V	−12 V	Normal ground
0 to +1	✓					✓
+1 to +5		✓				✓
+12				✓		✓
+24				✓	✓	

TABLE 1. Power supplies required to generate the specified voltages. Note that the "$V\pm$" supplies refer to the adjustable DC voltage sources set on the ADS.

(a) **Measure** the current produced by the self-biased current source for the voltage ranges [0 V, 1 V], [1 V, 5 V], +12 V, and 24 V as described in Table 1 and **plot** the current against the current source voltage V_1, as in Fig. 27.

Note that there is no explicit ground in this circuit. By using various combinations of the fixed +12 V and −12 V power supplies, the adjustable +1 V to +5 V and −1 V to −5 V power supplies, and even the Wavegen

constant V_{DS}: in this case, +12 V. However, there will be a voltage drop across the current meter which can be as large as about 0.2 V depending on the current being measured and the current scale. Thus, V_{DS} will always be a bit less than +12 V and it will not be constant. There are techniques to avoid this problem, but we will not use them here. Later in this course, you will learn how to measure current with a op amp circuit that will disturb the circuit by only $\mathcal{O}$(mV).

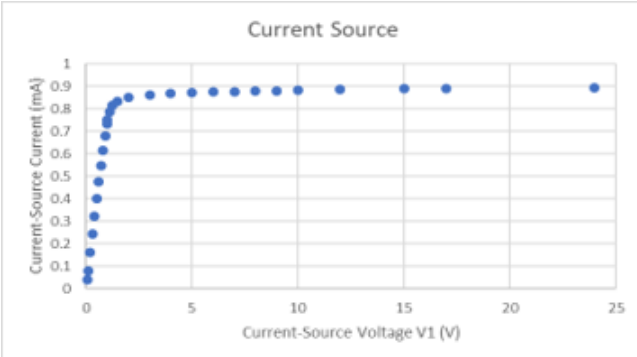

FIGURE 27. Current source performance.

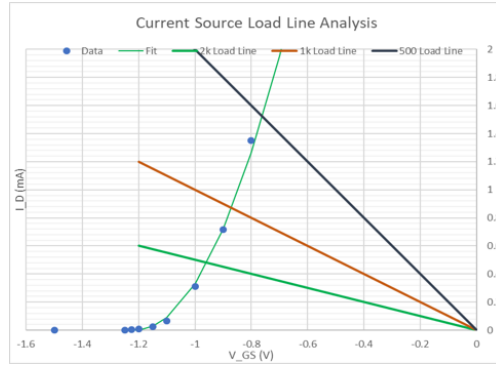

FIGURE 28. Self-biased current source load line.

(for voltages less than +1 V), you can generate nearly all voltages from 0 V to +24 V as in Table 1, Fig. 25 and Fig. 26.

Note also that the Wavegen should only be used for V_1 for voltages less than 1 V because of its significant output impedance; above 1 V, the increasing current draw through the JFET makes the Wavegen output voltage not stiff. Never hook the power supply and Wavegen output directly to another. Doing so may burn out your ADS.

(b) Above +5 V, the current source should be "stiff", i.e. the current should barely change as V_1 changes. Measure the slope, $\frac{\partial I}{\partial V_1}$, around +5 V. This is the inverse of the dynamic small-signal resistance of the current source, r_{eff}.

(c) **Set** $V_1 = +12$ V. **Remeasure** the current. **Warm** the JFET by squeezing it between your fingers. Try not to touch any of the wires, but it is safe even if you do touch a wire. **Remeasure** the current. You should find that the current does not change significantly. This will not necessarily be the case in other circuits.

(d) After letting the JFET **cool** for several minutes, keep $V_1 = +12$ V and **measure** the current again, **exchanging** the 1 kΩ resistor for a 510 Ω resistor and for a 2 kΩ resistor. **Perform** a load line analysis using the I_{D} vs V_{GS} data that you took in L5.4 and **compare** your measurements of the current with the predicted values. Use your fit to interpolate the characteristic to the intersections. Qualitatively, how accurate is the load line analysis? Your analyses should resemble the one in Fig. 28.

Problem L5.6 - Matching JFETs. Important characteristics of individual JFETs (pinch-off voltage V_{P}, drain-source leakage current I_{DSS}, transconductance $g_{\text{m}}(V_{\text{GS}} = 0)$, ...) will vary significantly from JFET to JFET. Many circuits using multiple transistors work best if the transistors are precisely matched. Thus, it is important to develop techniques to select transistors from a large, varied stock that are nearly identical; this set of nearly identical transistors is called a *matched pair*.

There are many parameters that could be matched, and there is no guarantee that matching one parameter, say I_{D} at $V_{\text{GS}} = 0$, will match other parameters, say, V_{P}. Nonetheless, it is usually sufficient to match just one parameter, and assume that the other parameters will be close. We will choose to measure the current in a self-biased current source with a 1 kΩ resistor with $V_1 = +12$ V.

You have already measured this current for your primary JFET in L5.5. In the circuit in Fig. 24, **swap in at least four** additional JFETs from your stock and measure their currents. Find the JFET that has the closest current to the one used in L5.5. With luck, you should be able to find something that is within a few percent, even well less than a percent. These two JFETs will be your matched pair.[22]

Mark your JFET matched pair with some tape and save it for Lab 6.

[22] Note that this method of selecting matched pairs is not practical for commercial equipment — imagine doing this matching procedure by hand for hundreds of transistors! Fortunately, it is rarely necessary because JFETs constructed on the same piece of silicon, such as in an integrated circuit, are very well matched. For the rare occasions when a discrete matched pair is required, very simple integrated circuits containing only a matched JFET pair are available.

Problem L5.7 - Simple Source Follower. **Build** the source follower shown in Fig. 29a using the JFET used in L5.4. This should be one of the JFETs in your matched pair. **Drive** the follower input V_{in} with the Wavegen. **Observe** the drive signal V_{in} on Scope Channel 1, and the output V_{out} on the Scope Channel 2.

(a) **Start** with a 100 mV Amplitude Sine drive at 1 kHz, and with an Offset of 0 V. **Compare** V_{out} to V_{in}. Notice that the output amplitude V_{out} is **smaller** than the input amplitude V_{in}. **Measure** the small-signal gain $v_{\text{out}}/v_{\text{in}}$; it should be in the neighborhood of 0.8. Your output signal will be offset by a constant voltage. Can you **explain** the origin of this offset?[23]

(b) **Play** with other values of the Wavegen offset, amplitude, and frequency. What is the **maximum** waveform amplitude you can find that yields a reasonably undistorted wave?

(c) **Temporarily** set $V_{\text{in}} = 0$. With the DMM, **measure** the voltage across the 1 kΩ resistor in Fig. 29a. Then **calculate** the current through the resistor; it should be identical to the current in the original configuration of the self-biased current source in L5.5 (if it's the same transistor). Using this current, **determine** the internal source resistance r_{s} from the graph you plotted in L5.4.

(d) Using Eq. 5 and the value of r_{s}, **calculate** the expected gain of your source follower. Is it **close** to what you measure?

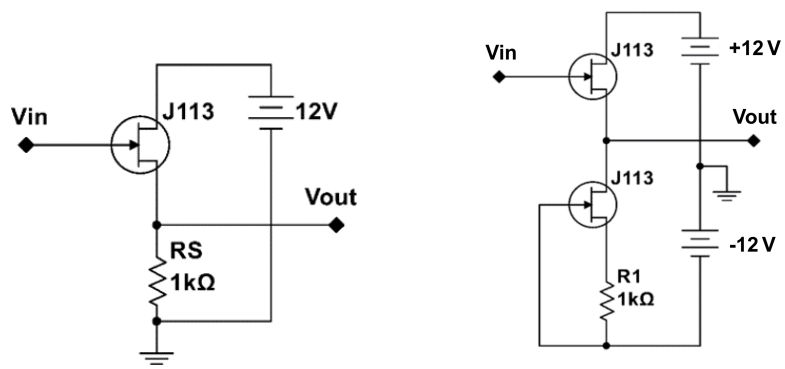

(a) Simple source follower. (b) Improved source follower.

FIGURE 29. Source follower circuits.

Problem L5.8 - Improved Follower I. You should have found that the gain of the follower in L5.7 is less than one. This is not the desired behavior of a follower, so let's improve it!

Naively, Eq. 5 suggests the gain can be improved by simply increasing the 1 kΩ source resistor R_{S}. Unfortunately, this would also make V_{GS} more negative, thereby decreasing the drain current I_{D} and the transconductance, and increasing r_{s}, so the improvement to the gain would be marginal. Moreover, the output impedance of the follower would also increase via Eq. 6.

We need a way to effectively increase R_{S} without changing V_{GS}. This can be accomplished by replacing R_{S} with a current source. Since a current source is stiff, its effective $R_{\text{S}} = r_{\text{eff}}$ can be very large, but since I_{D} remains large, the JFET remains in a region where r_{s} is small (see Fig. 8).

Using your matched pair, **build** the circuit in Fig. 29b. **Measure** the gain with a 100 mV sine drive at 1 kHz, and with an Offset of 0 V. Is it **closer** to unity than the gain of the simple follower? How does your measured gain **compare** to the gain from Eq. 5 if you use the r_{eff} you calculated in L5.5 for R_{S}?

[23] Note that if the Scope Range is improperly set, measurements may saturate and be erroneous. An erroneous measurement will be shown with a red background like this. **Fix** this issue by adjusting the Range of the offending channel to be greater than 500 mV/div. Even with this fix, the signal trace itself may not necessarily be visible. It is always best to confirm that your signal is correct by viewing its trace. You should be able to bring the trace into view by adjusting the Range and Offset.

Problem L5.9 - Common Source JFET Amplifier. **Construct** the amplifier shown in Fig. 30 below. If possible, use the JFET that you characterized in L5.4. Use your DMM to **measure** the equilibrium voltages and currents in the circuit (V_{GS}, V_{DS}, I_{DS}, V_{foll}, V_{out}) when $V_{in} = 0$, i.e. when the input is grounded.[24]

(a) **Drive** the amplifier at V_{in} with a 1 kHz 100 mV sine wave, and **measure** the follower gain V_{foll} on the scope. Remember that R_D does not normally much affect the circuit's performance as a follower. Use this gain to **infer** the internal source resistance r_s using Eq. 5. If you are using the same JFET as in L5.7, it should be close to what you measured before, though because V_{DS} is different because of R_D, it may not be exactly the same.

(b) Now **measure** the amplified signal at V_{out}. **Compare** your measured gain with the predictions of the exact and approximate gain formulas found in Eq. 9. Is the approximate formula "good enough" (obviously a somewhat arbitrary standard)?

Is V_{out} **inverted**?

Record the time-averaged voltage $\langle V_{out} \rangle$. This quantity is given by one of the automatic measurements.

(c) Vary the input voltage V_{in} from 0.1 V to 5 V. What is the **maximum undistorted output amplitude** at V_{out}? What limits the amplitude?

Problem L5.10 - Common Source JFET Amplifier: Attempts to increase gain. **Restore** the original ADS parameters used in L5.9. Since the gain of this circuit is quite modest, it is worth exploring ways to increase the gain.

(a) Eq. 9 suggests that we can increase the gain simply by increasing R_D.

Replace R_D with a succession of resistors ranging from 1 kΩ to 10 kΩ, incrementing by approximately a factor of 1.5 each time (no need to be precise, you can just pick the closest resistor values.) **Measure** and **record** the gain and the average voltage $\langle V_{out} \rangle$ for each resistor value.

You should find that increasing R_D works for a while, but not for arbitrarily high R_D. **What** is the maximum gain that you can achieve? **Why** does this stop working? Hint: consider $\langle V_{out} \rangle$.

(b) Eq. 9 also suggests that we can increase the gain by decreasing the source resistor R_S. With $R_D = 1\,\text{k}\Omega$ in Fig. 30, **measure** the gain for R_S equal to 100 Ω, 47 Ω, 22 Ω, 10 Ω and 0 Ω. What do you observe? How closely does the gain **follow** the simplified gain formula $-R_D/R_S$? Note that this formula predicts that the gain would be infinite at $R_S = 0$. For each resistor, **calculate** the value of r_s that is necessary to make the gain agree with the prediction of the exact version of Eq. 9.

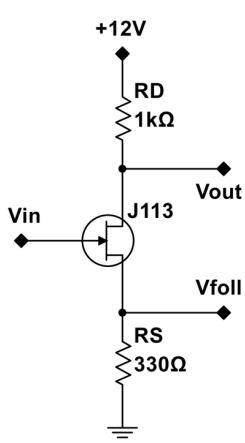

FIGURE 30. Common-source amplifier.

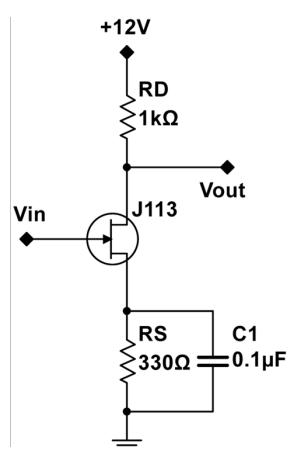

FIGURE 31. Common source amplifier with bypass capacitor.

[24] See footnote 23.

Problem L5.11 - Common Source JFET Amplifier: Bypass Capacitor. Let's try to accrue the majority of the benefits of having no external R_S, while having a device with more reproducible equilibrium current flow. **Modify** your circuit to add a capacitor, as shown above in Fig. 31.

(a) **Perform** a Network Analyis over a frequency range from 500 Hz to 5 MHz with an amplitude of 50 mV. Go to the gear icon for the Scope channel measuring V_{out} and set the Range to 10 V - or alternatively, set the Offset to around -8 V (why?). Your results should look like those in Fig. 32, where the yellow trace is with the capacitor and source resistor in place, the green trace is with the source resistor but without the capacitor, and the red trace is neither source resistor or capacitor, i.e. the source is grounded. To see multiple traces like in Fig. 32, you can save the current trace from a particular channel via Add Channel > Channel # on the right side of the Network Analysis window, which will preserve the trace for the specified channel on screen.

If your $R_S = 0\,\Omega$ curve looks different, **explain why**. You should be able to **recover** a similar curve by incorporating a small offset to the input drive. **Recall that V_{GS} is the voltage difference between the gate and source:** what is V_{GS} when R_S is grounded? By how much should you need to offset the input drive, to recover a sensible gain profile for your JFET amplifier? Save this plot.

In all cases, the gain diminishes past about 1 MHz. This is due to intrinsic JFET limitations as well as parasitic capacitance on the breadboard.

More interesting is that the gain with C1 in place increases past about 2 kHz. Capacitor C1 is often called a bypass capacitor because it allows high frequency signals to go around (or *bypass*) the source resistor R_S.

Why is this beneficial? With the bypass capacitor in place, the small-signal, high frequency gain given by Eq. 9 reduces to $G \approx R_D/r_s$. Since $r_s \ll R_S$, this gain can be substantially larger than the gain given by Eq. 9: $R_D/(R_S + r_s)$. **Calculate** where the gain should increase by 3 dB and **compare** this calculation with your observations. (For simplicity, ignore r_s when calculating the 3 dB point.)

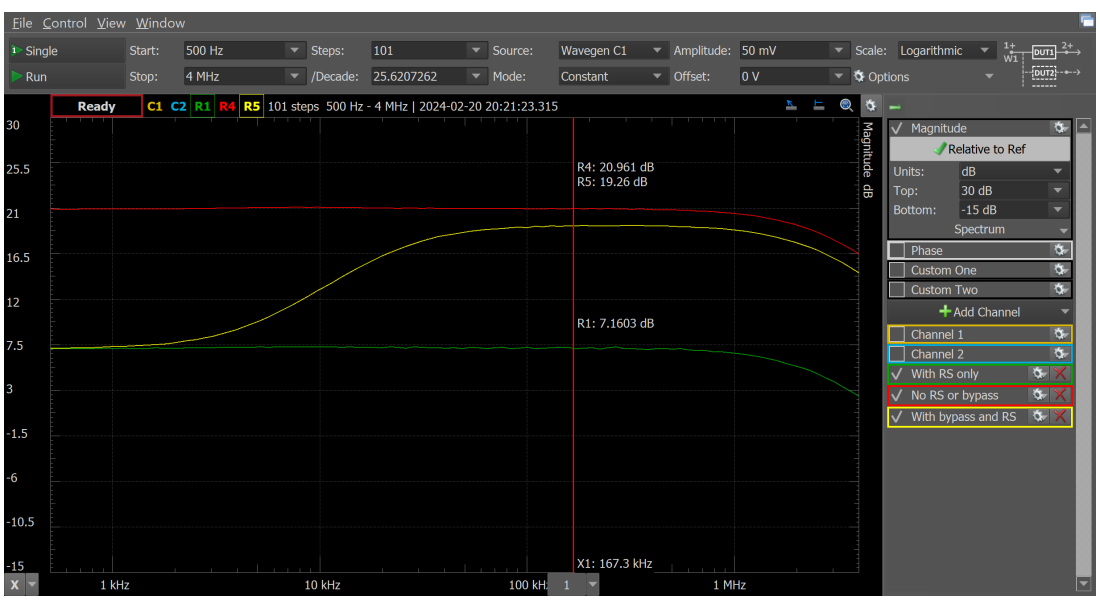

FIGURE 32. Network Analysis for the circuit (common source amplifier with bypass capacitor) in Fig. 31.

(b) You might wonder why we do not simply set $R_S = 0\,\Omega$. After all, the peak gain is generally (but not always) higher since the device would generally be running at higher current than with a finite source resistor. The transconductance would generally be higher and r_s would be smaller. Further, we would get a gain of R_D/r_s at all frequencies below the high-frequency roll off. Setting $R_S = 0\,\Omega$ would work to some extent, but it is not a good technique.

With C1 in place and $R_S = 330\,\Omega$, **measure** and **record** the gain for five different JFETs at some fixed frequency, say 200 kHz. **Calculate** the average, the standard deviation, and the standard deviation/average of the measured gains. Then **do the same** with $R_S = 0\,\Omega$. **Show** that the standard deviation/average of the gains is much higher in the latter case.[25]

[25] If you are mass-producing a circuit, you want each circuit to have the same gain. The variability that you observe with $R_S = 0\,\Omega$ would preclude using this technique in real-world applications. Similar problems arise when using very large R_D. If that wasn't enough, the amplifier would also be temperature-sensitive, tend to have stability problems at DC, and/or might draw too much current. This can lead to *thermal runaway* which can burn the device out. So clearly, there is no shortage of issues with this approach!